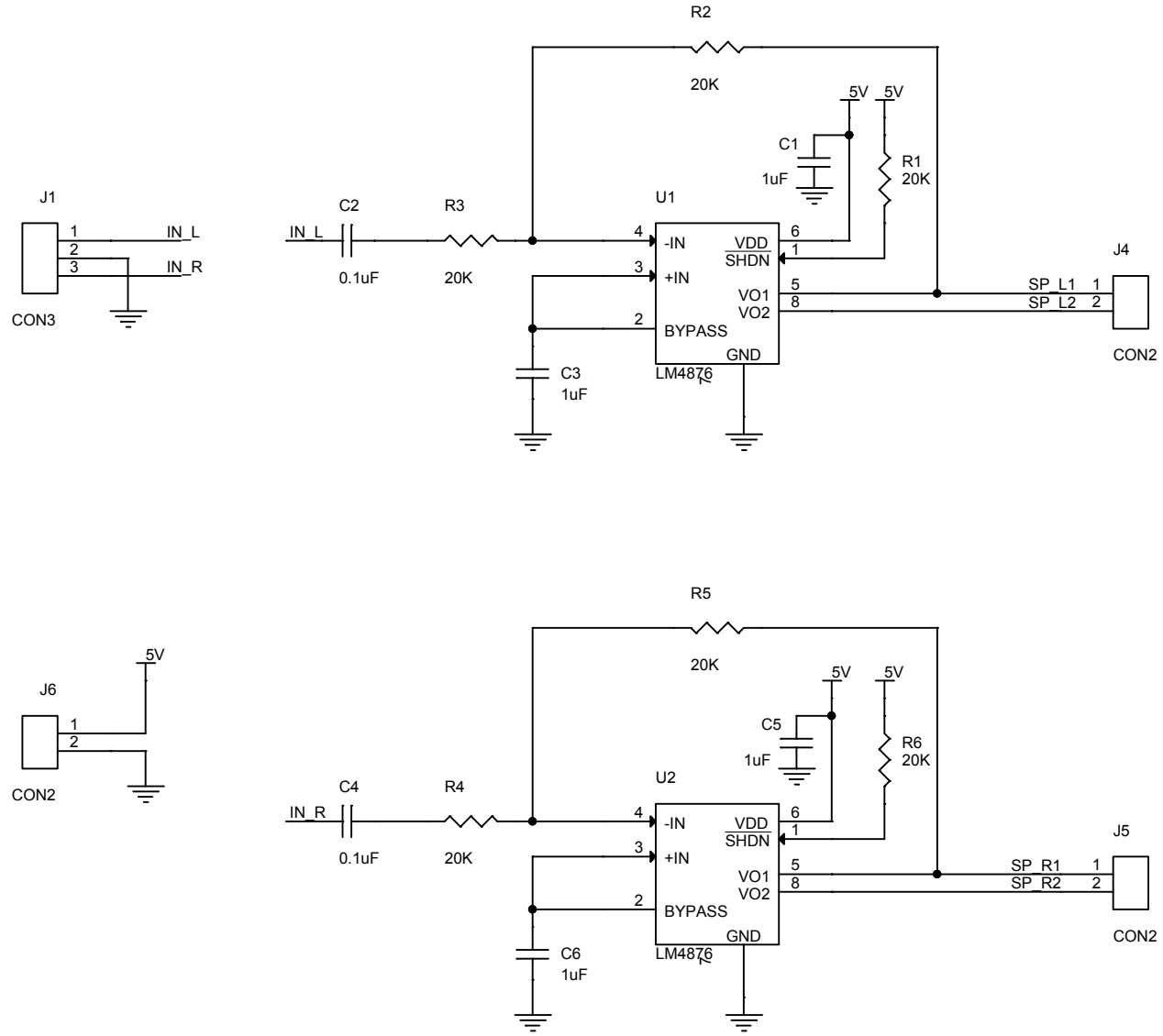

www.BoardFree.kr BL-608