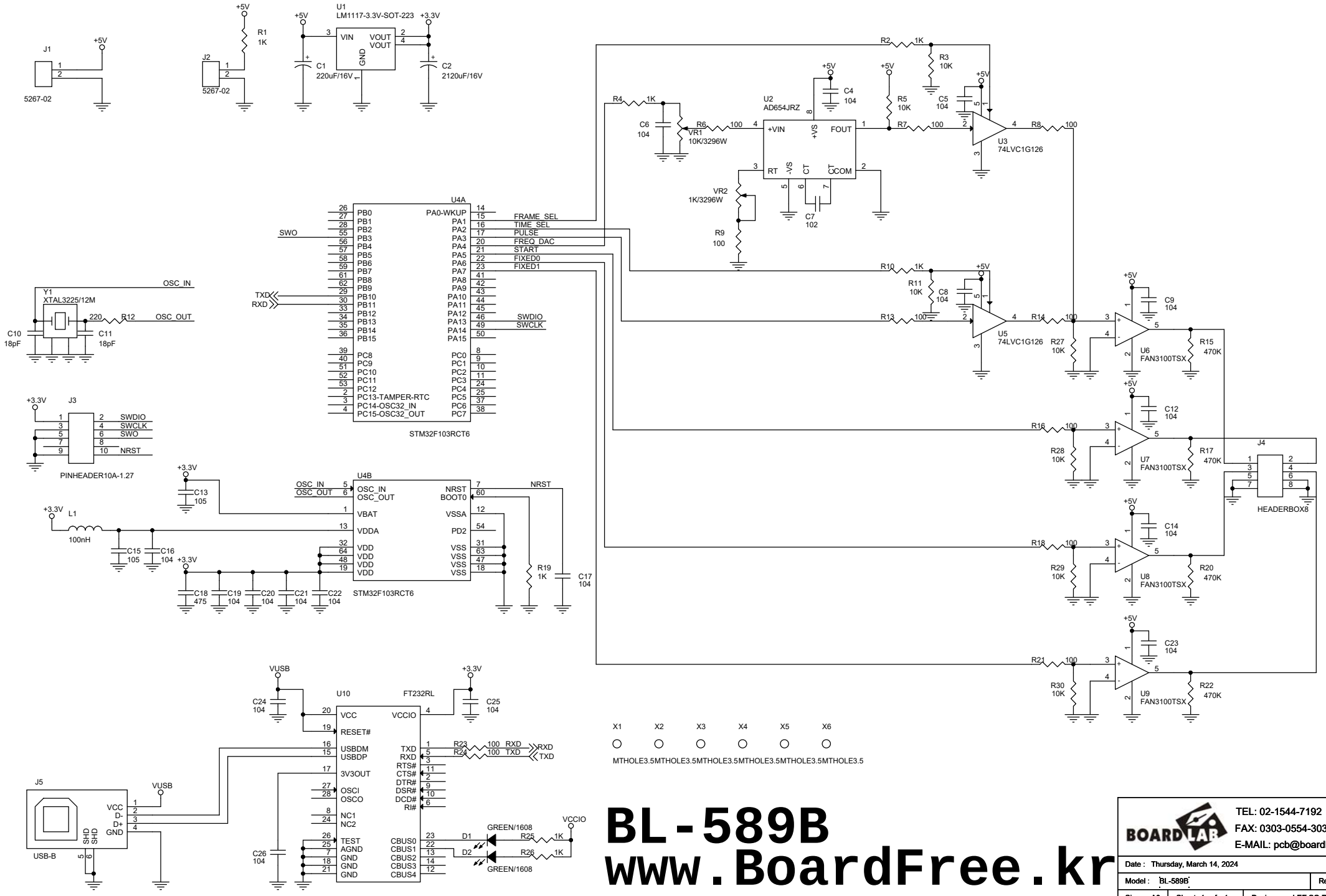
J1
5267-02
J2
5267-02
R1
1K
U1
LM1117-3.3V-SOT-223
VIN
VOUT
VOUT
GND
C1
220uF/16V
C2
2120uF/16V
U2
AD654JRZ
+VIN
FOUT
RT
-VS
CT
COM
VR1
10K/3296W
VR2
1K/3296W
C7
102
U3
74LVC1G126
U5
74LVC1G126
U4A
STM32F103RCT6
FRAME_SEL
TIME_SEL
PULSE
FREQ_DAC
START
FIXED0
FIXED1
SWDIO
SWCLK
SWO
TXD
RXD
Y1
XTAL3225/12M
OSC_IN
OSC_OUT
C10
18pF
C11
18pF
J3
PINHEADER10A-1.27
U4B
STM32F103RCT6
NRST
L1
100nH
U6
FAN3100TSX
U7
FAN3100TSX
U8
FAN3100TSX
U9
FAN3100TSX
J4
HEADERBOX8
U10
FT232RL
VUSB
J5
USB-B
GREEN/1608
VCCIO
MTHOLE3.5
BL-589B
www.BoardFree.kr
BOARD LAB
TEL: 02-1544-7192
FAX: 0303-0554-3035
E-MAIL: pcb@boardlab.net
Date : Thursday, March 14, 2024
Model : BL-589B
Rev : 1.0
Size : A3
Sheet 1 of 1
Designer : LEE SO RI
Notes : <Note>