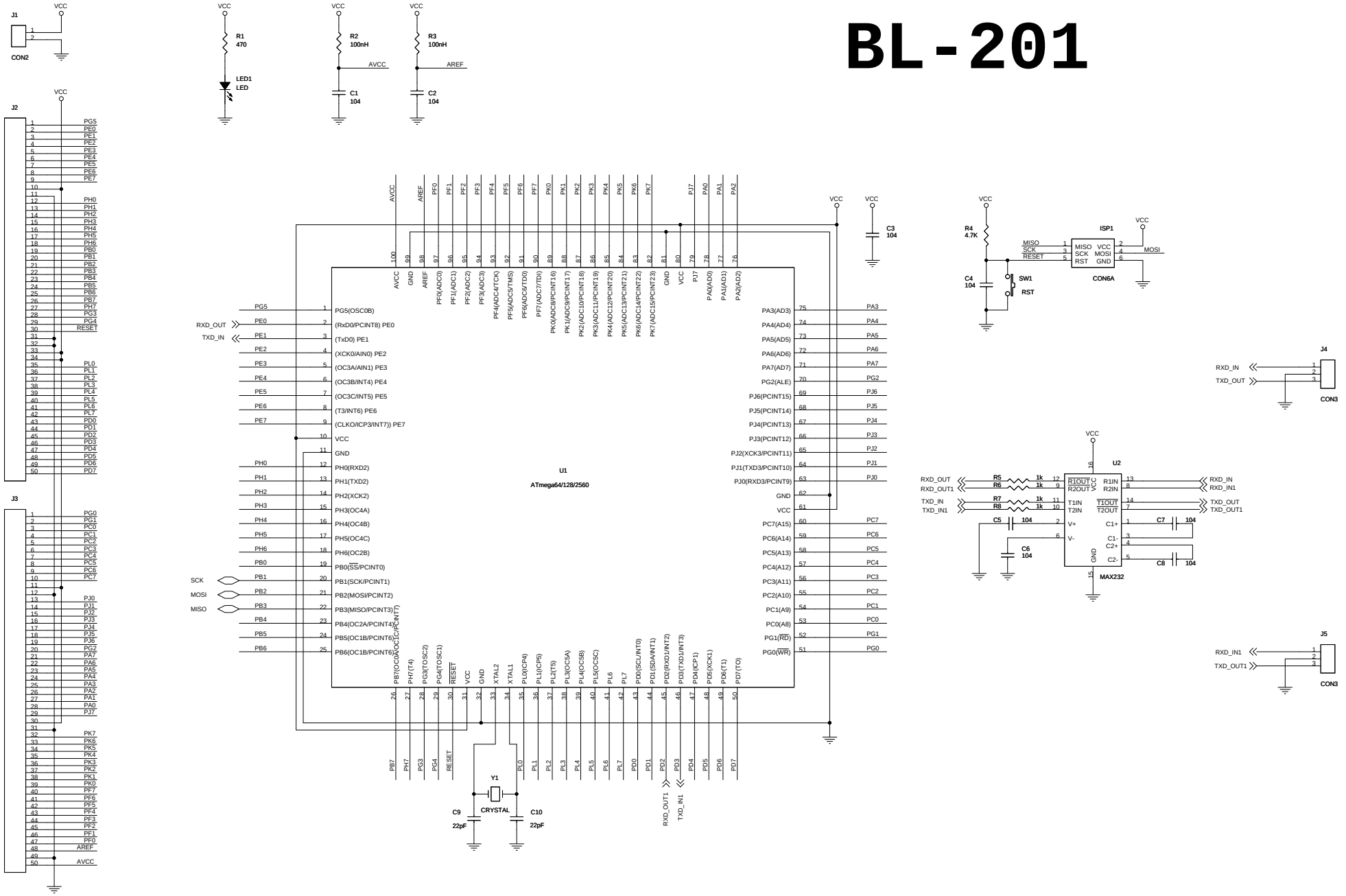www.BoardFree.kr
BL-201