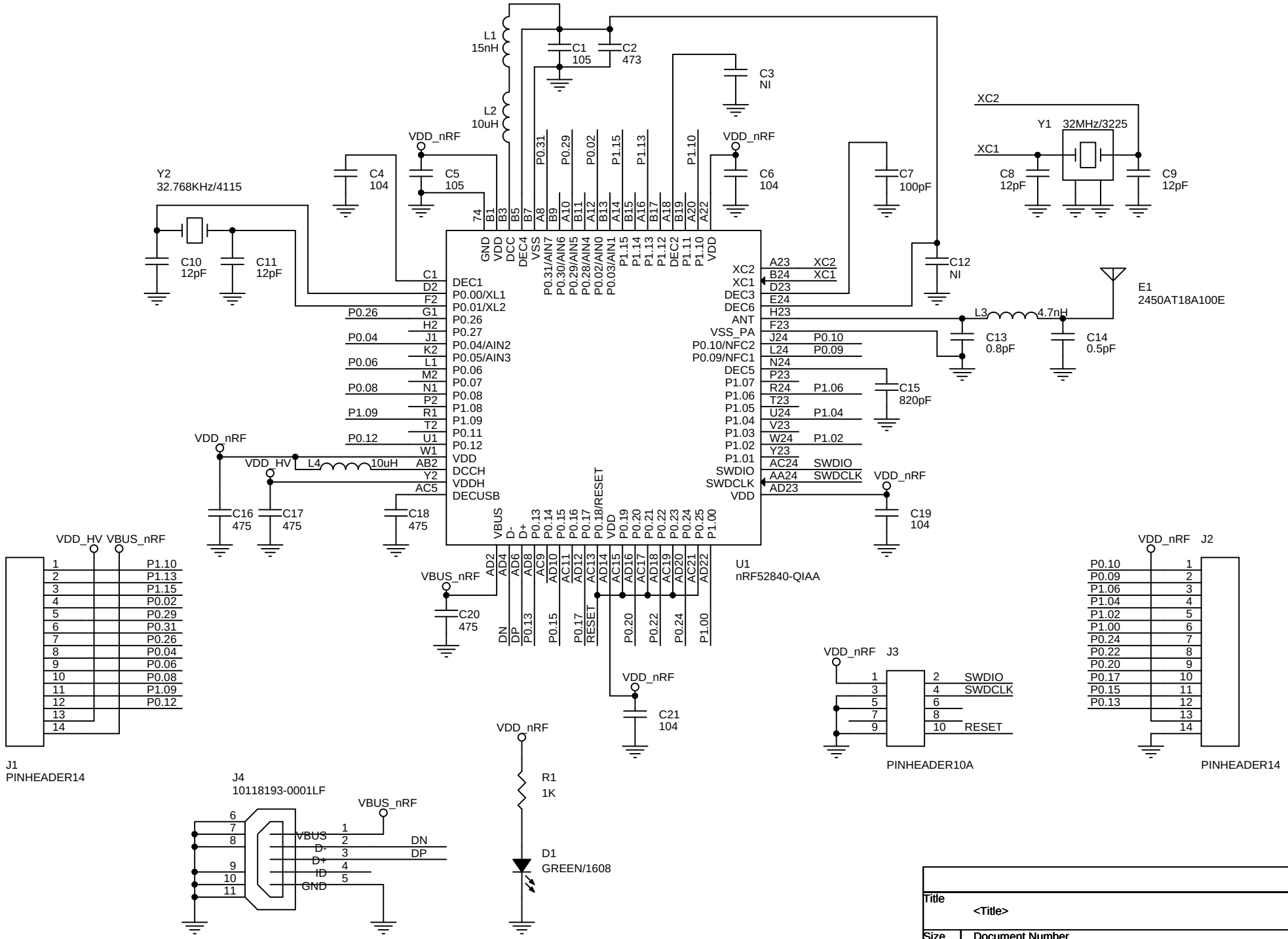

Title	<Title>	
Size A4	Document Number <Doc>	Rev <Rev
Date: Tuesday, August 11, 2020	Sheet 1 of 1	