www.BoardFree.kr BL-704

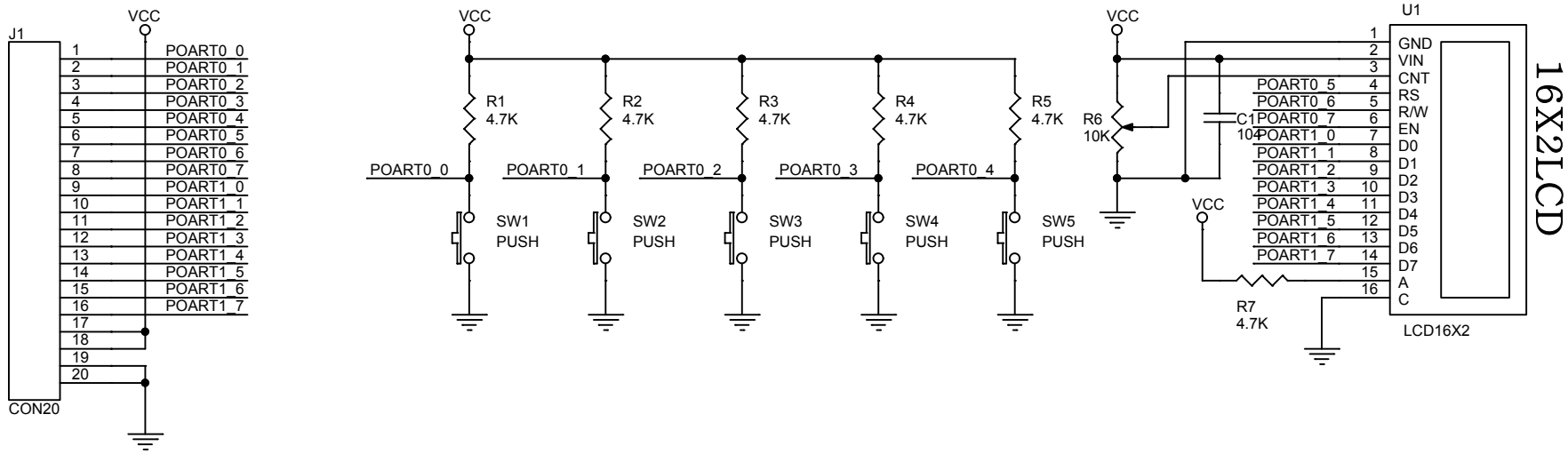

Title <Title>		
Size A4	Document Number <Doc>	Rev <Rev
Date: Monday, December 17, 2018	Sheet 1 of 1	