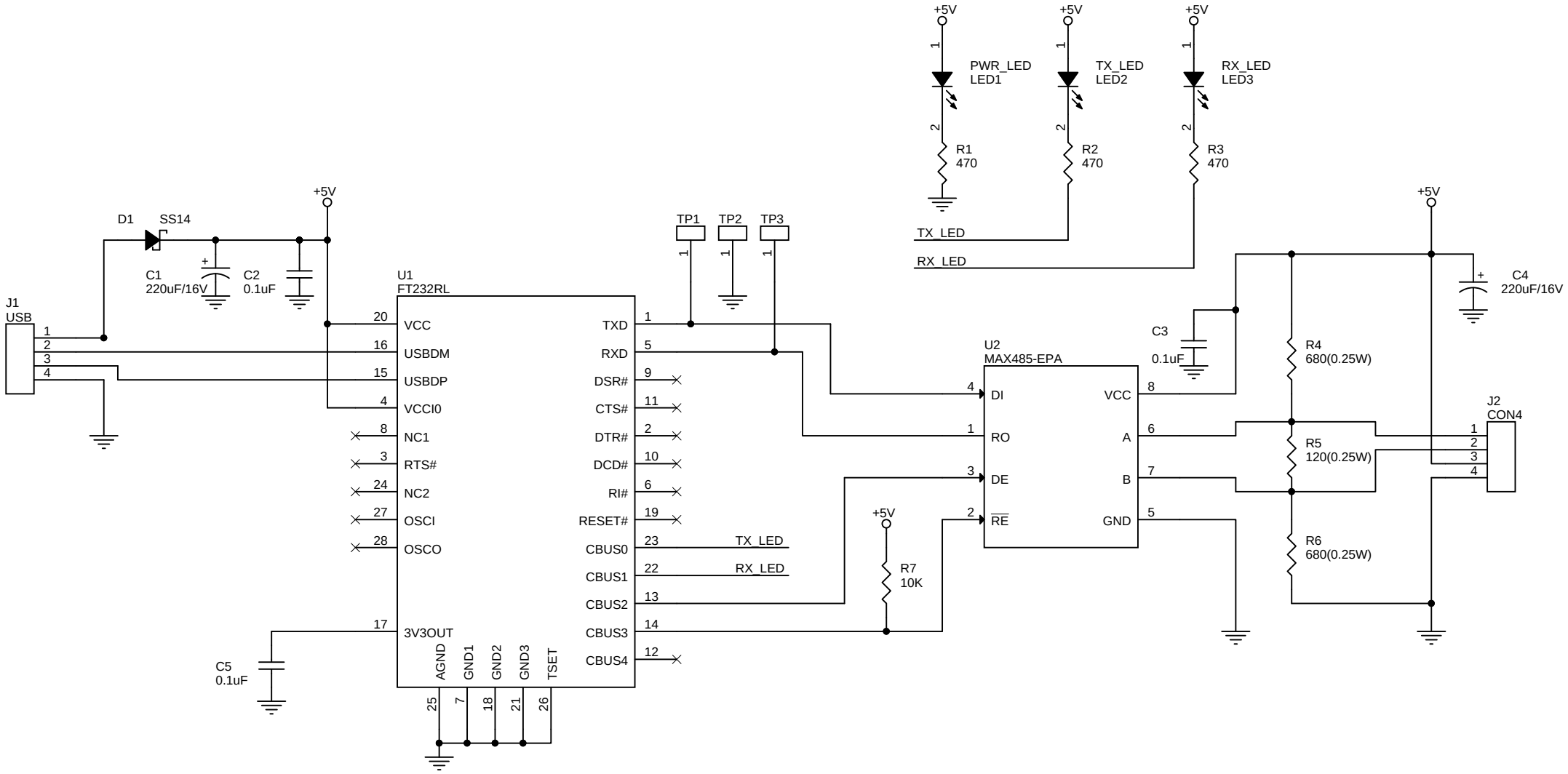www.BoardFree.kr BL-140