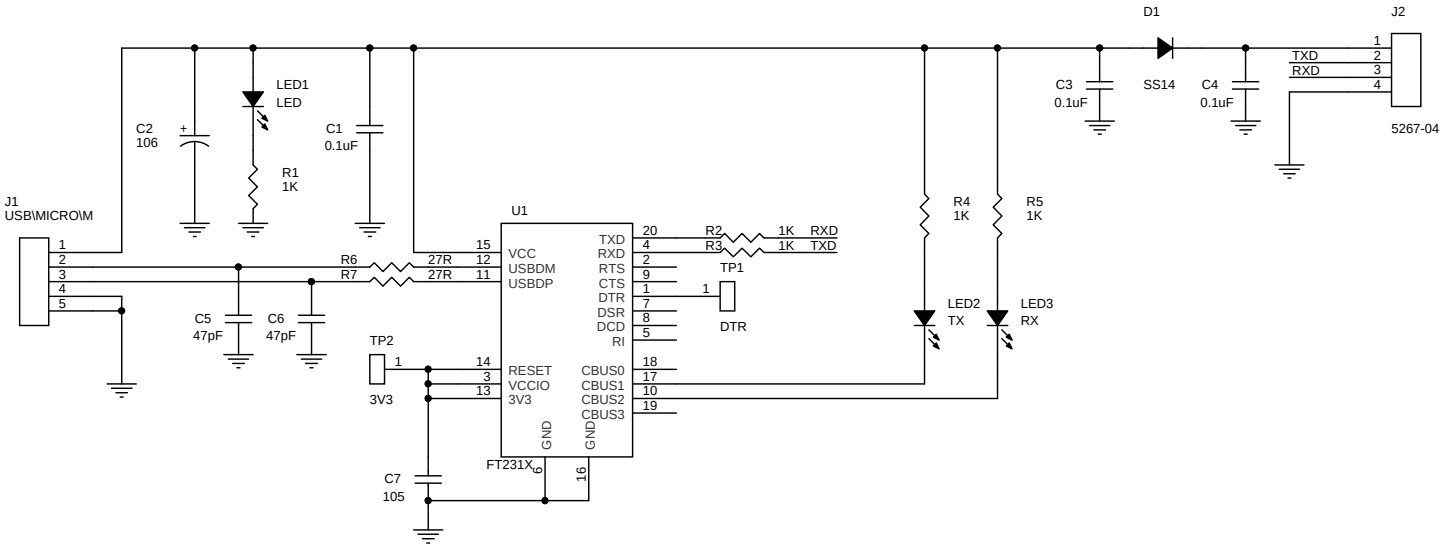www.BoardFree.kr BL-144