www.BoardFree.kr

BL-574

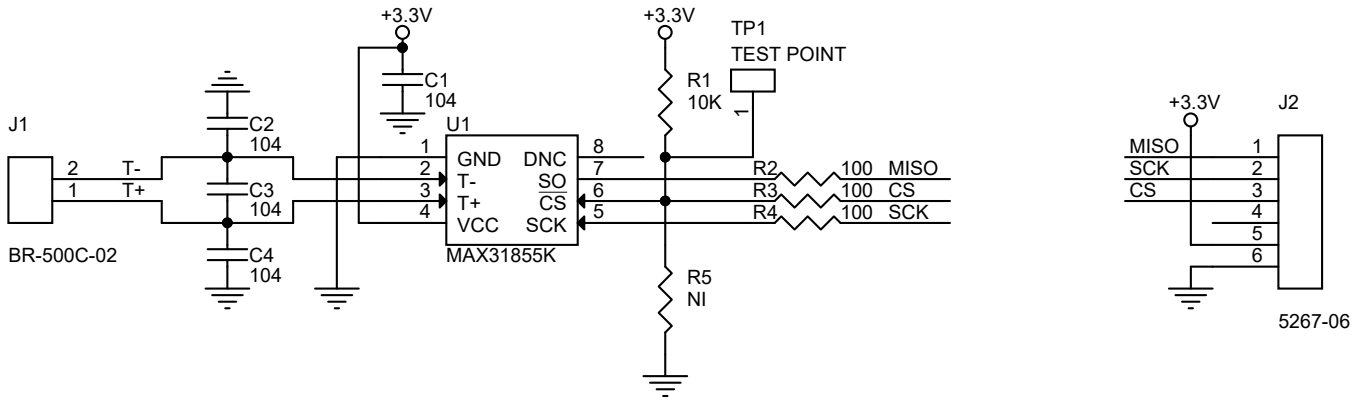

Title	<Title>	
Size A	Document Number <Doc>	Rev <RevCode>
Date: Wednesday, June 09, 2021	Sheet 1 of 1	